UNIVERSITY OF CAMBRIDGE INTERNATIONAL EXAMINATIONS
International General Certificate of Secondary Education

CANDIDATE NAME	

CENTRE NUMBER						CANDIDATE NUMBER					

* 2 4 2 5 8 6 3 1 0 1 *

PHYSICS **0625/21**

Paper 2 Core **May/June 2010**

1 hour 15 minutes

Candidates answer on the Question Paper.

No Additional Materials are required.

READ THESE INSTRUCTIONS FIRST

Write your Centre number, candidate number and name on all the work you hand in.
Write in dark blue or black pen.
You may use a soft pencil for any diagrams, graphs or rough working.
Do not use staples, paper clips, highlighters, glue or correction fluid.
DO **NOT** WRITE IN ANY BARCODES.

Answer **all** questions.
You may lose marks if you do not show your working or if you do not use appropriate units.
Take the weight of 1 kg to be 10 N (i.e. acceleration of free fall = 10 m / s^2).

At the end of the examination, fasten all your work securely together.
The number of marks is given in brackets [ ] at the end of each question or part question.

This document consists of **18** printed pages and **2** blank pages.

DCA (SHW 00380 1/09) 20403/6
© UCLES 2010

UNIVERSITY of CAMBRIDGE International Examinations

[Turn over

www.root19.com +91 - 9969 353 391

For Examiner's Use

1 Imagine that you live beside a busy road. One of your neighbours thinks that many of the vehicles are travelling faster than the speed limit for the road.

You decide to check this by measuring the speeds of some of the vehicles.

(a) Which two quantities will you need to measure in order to find the speed of a vehicle, and which instruments would you use to measure them?

quantity measured	instrument used

[4]

(b) State the equation you would use to calculate the speed of the vehicle. If you use symbols, state what your symbols mean.

[1]

(c) One lorry travels from your town to another town. The lorry reaches a top speed of 90 km / h, but its average speed between the towns is only 66 km / h.

(i) Why is the average speed less than the top speed?

.....

.....

..... [1]

(ii) The journey between the towns takes 20 minutes.

Calculate the distance between the towns.

distance = ... km [3]

[Total: 9]

© UCLES 2010
www.root19.com

+91 - 9969 353 391

For Examiner's Use

2 A helical spring is hung from the edge of a bench top, as shown in Fig. 2.1.

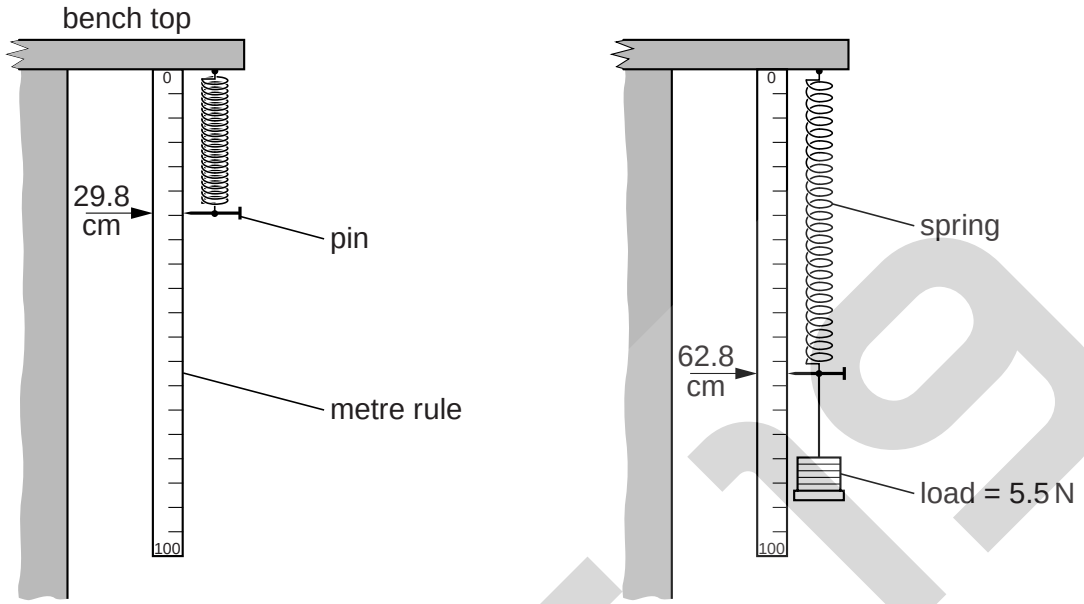

Fig. 2.1

Before the load is hung on the spring, the pin points to the 29.8 cm mark on the metre rule.

When a load of 5.5 N is hung on the spring, the pin points to 62.8 cm.

(a) Calculate the extension of the spring.

extension = ... cm [2]

(b) The law relating extension to load is given by the equation

load = constant × extension.

(i) Calculate the numerical value of the constant.

constant = ... [2]

(ii) Suggest a suitable unit for the constant.

..... [1]

[Total: 5]

© UCLES 2010
www.root19.com

+91 - 9969 353 301

For Examiner's Use

3 **(a)** Fig. 3.1 represents the energy into and out of a machine.

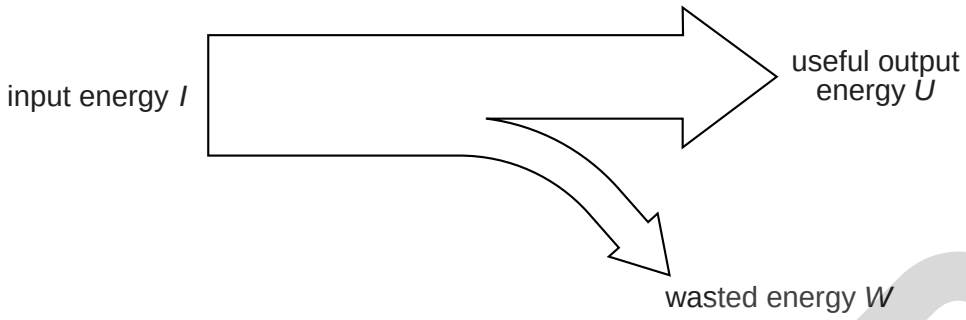

Fig. 3.1

Write down the equation linking *I*, *U* and *W*.

..... [1]

(b) An electric motor and a pulley in a warehouse are being used to lift a packing case of goods from the ground up to a higher level. This is shown in Fig. 3.2.

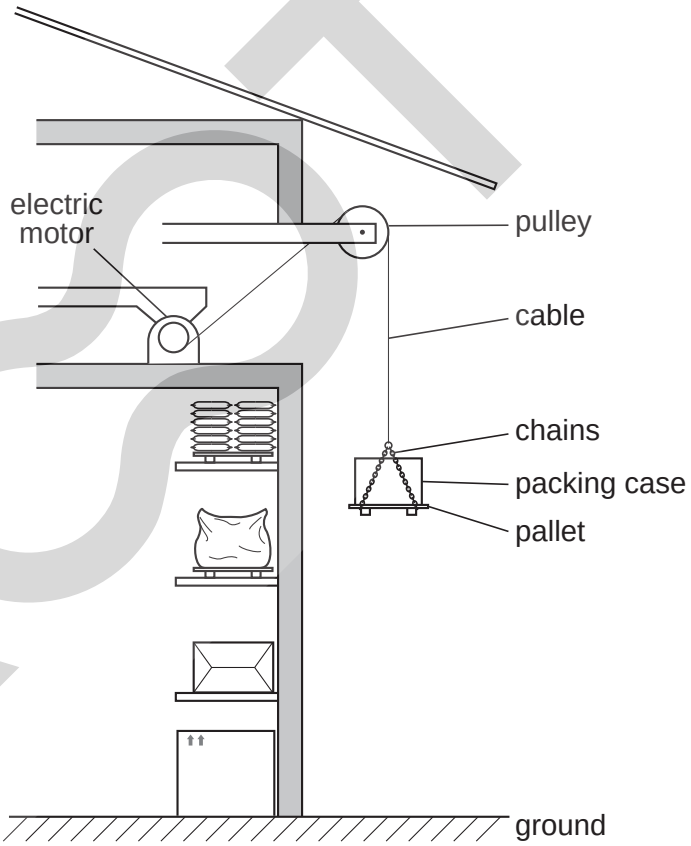

Fig. 3.2

The packing case of goods, the chains and the pallet together weigh 850 N.

(i) State the value of the tension force in the cable when the load is being lifted at a steady speed.

tension force = ... N [1]

© UCLES 2010
www.root19.com

+91 - 9969 353 391

For Examiner's Use

(ii) When the load is just leaving the floor, why is the force larger than your answer to **(b)(i)**?

.....

..... [1]

(iii) The warehouse manager wishes to calculate the useful work done when the load is lifted from the ground to the higher level. Which quantity, other than the weight, does he need to measure?

..... [1]

(iv) Which further quantity does the manager need to know, in order to calculate the power required to lift the load?

..... [1]

(c) How does the electrical energy supplied to the electric motor compare with the increase in energy of the load? Answer by completing the sentence below.

The electrical energy supplied to the motor is …… the

increase in energy of the load. [1]

[Total: 6]

© UCLES 2010
www.root19.com

+91 - 9969 353 301

For Examiner's Use

4 **(a)** A musical note is being produced by a loudspeaker connected to a signal generator.

A person is listening to the note, as shown in Fig. 4.1.

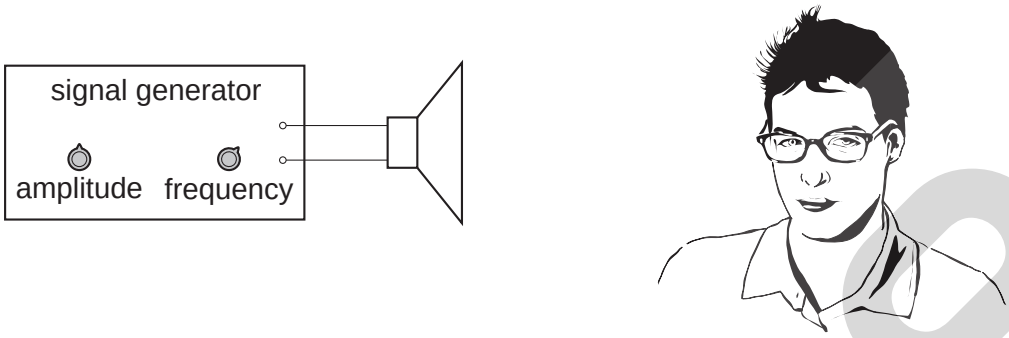

Fig. 4.1

By adjusting the controls on the signal generator, the amplitude and the frequency of the note from the loudspeaker can each be changed.

The person moves to a position further away from the loudspeaker.

(i) State what, if anything, happens to

1. the pitch of the sound heard,

.....

2. the loudness of the sound heard.

..... [2]

(ii) What adjustment, if any, should be made to the two controls so that the sound heard in the new position is the same as in the original position?

frequency control .....

amplitude control ..... [2]

© UCLES 2010
www.root19.com

+91 - 9969 353 391

For Examiner's Use

(b) Fig. 4.2 shows a girl standing some distance from a rock face. She has a bell in her hand.

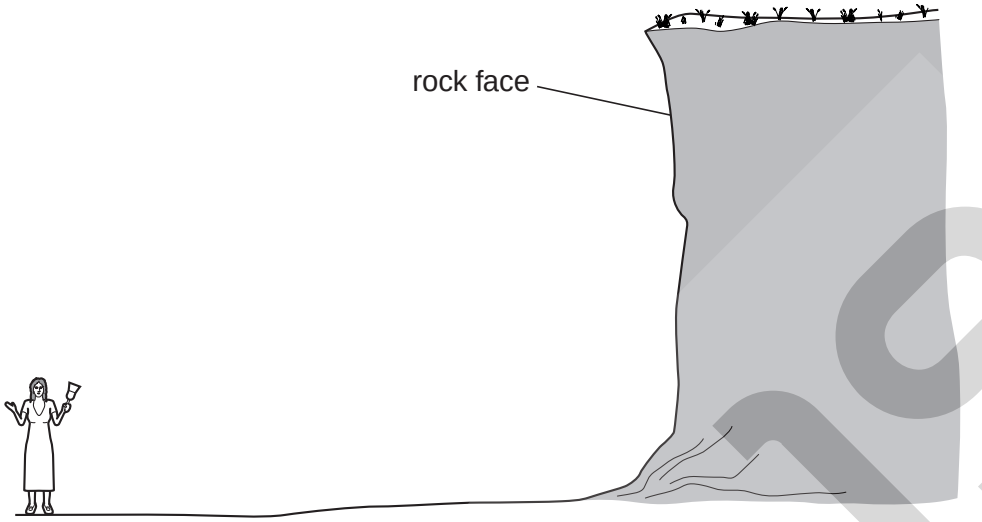

Fig. 4.2

The girl rings the bell once. After a short time the sound of the bell reaches her again.

(i) Why did the sound return to her?

..... [1]

(ii) Why was there a short time delay before the girl heard the second sound?

..... [1]

[Total: 6]

www.root19.com +91 - 9969 353 301

For Examiner's Use

5 Fig. 5.1 shows a child's toy. It is made out of wood, in the shape of a bird. The toy includes a metal weight stuck to the tail. When placed on a metal rod, the toy balances in equilibrium.

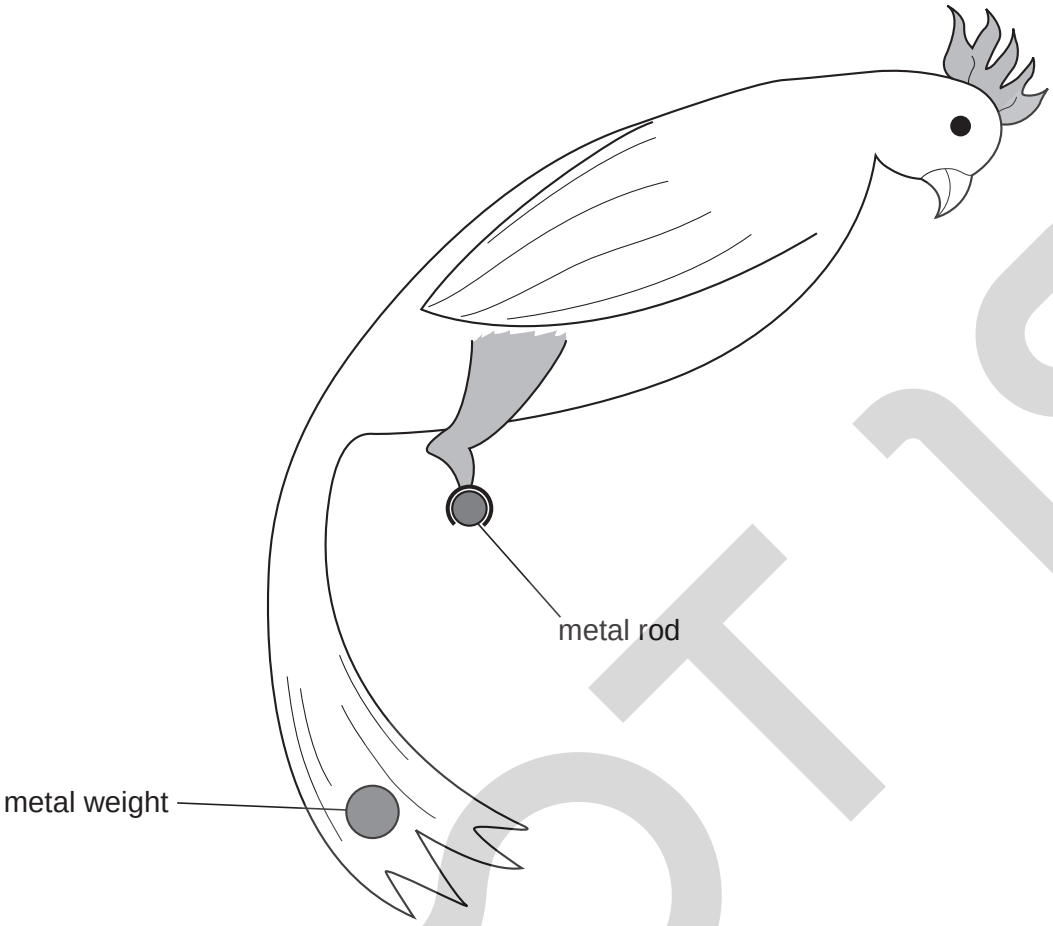

Fig. 5.1

(a) On Fig. 5.1, mark with the letter X a possible position for the centre of mass of the toy. [1]

(b) The metal weight falls off the tail.

(i) On Fig. 5.1, mark with the letter Y a possible new position for the centre of mass. [1]

(ii) What happens to the toy immediately after the metal weight falls off?

.....

.....

..... [2]

[Total: 4]

© UCLES 2010
www.root19.com

+91 - 9969 353 391

For Examiner's Use

6 **(a)** Fig. 6.1 shows a beaker in which coffee is served at an airport kiosk.

Fig. 6.1

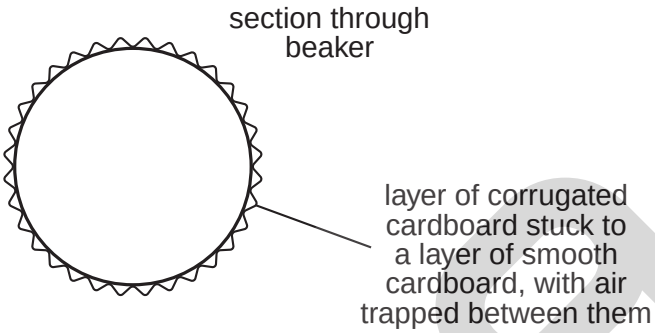

Fig. 6.2

The beaker itself is made of two layers of cardboard, as shown in section in Fig. 6.2. It has a thin plastic lid.

(i) State two sources of heat loss that are reduced by the lid.

1. .....

2. ..... [2]

(ii) State two reasons why the layer of corrugated cardboard stops the fingers of the person holding the beaker from becoming uncomfortably hot.

1. .....

2. ..... [2]

(b) **(i)** State the meaning of the term *thermal capacity*.

.....

..... [2]

(ii) Another airport kiosk serves coffee in pottery mugs. The mugs all have the same internal dimensions but some have a high thermal capacity and some have a low thermal capacity.

When hot drinks are poured into the mugs, the temperature of the drink always drops because of the thermal energy absorbed by the mug.

State which mug, high thermal capacity or low thermal capacity, causes the least fall in temperature of the hot drink, and explain why.

mug .....

explanation ..... [2]

[Total: 8]

www.root19.com +91 - 9969 38 38 01

For Examiner's Use

7 The electric lamp in Fig. 7.1 has "240V, 100W" marked on it. Its filament is a coiled coil of fine tungsten wire, as shown in Fig. 7.2.

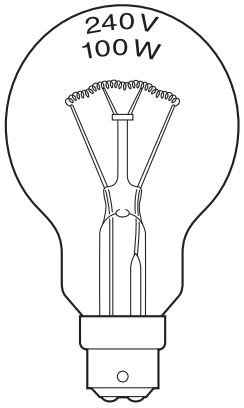

Fig. 7.1

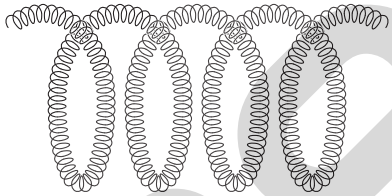

Fig. 7.2

(a) **(i)** To give out white light, the filament has to reach a very high temperature.

Suggest why having the filament as a coiled coil helps to achieve this high temperature.

.....

.....

..... [1]

(ii) If your hand is close to the lamp when it is switched on for a few seconds, you can feel warmth from the lamp but the glass will remain cool.

By what method has the thermal energy reached your hand? Tick one box.

conduction ☐

convection ☐

evaporation ☐

radiation ☐

[1]

www.root19.com +91 - 9969 353 391

For Examiner's Use

(b) **(i)** The markings on the lamp give electrical information about the lamp when it is operating normally.

State the value of

1. the normal operating potential difference across the lamp,

.....

2. the power of the lamp.

..... [2]

(ii) When the lamp is working normally, its resistance is 576 Ω.

Calculate the current in the lamp.

current = ... [4]

[Total: 8]

© UCLES 2010
www.root19.com

+91 - 9969 353 301

For Examiner's Use

8 Fig. 8.1 shows how an image is formed by a converging lens.

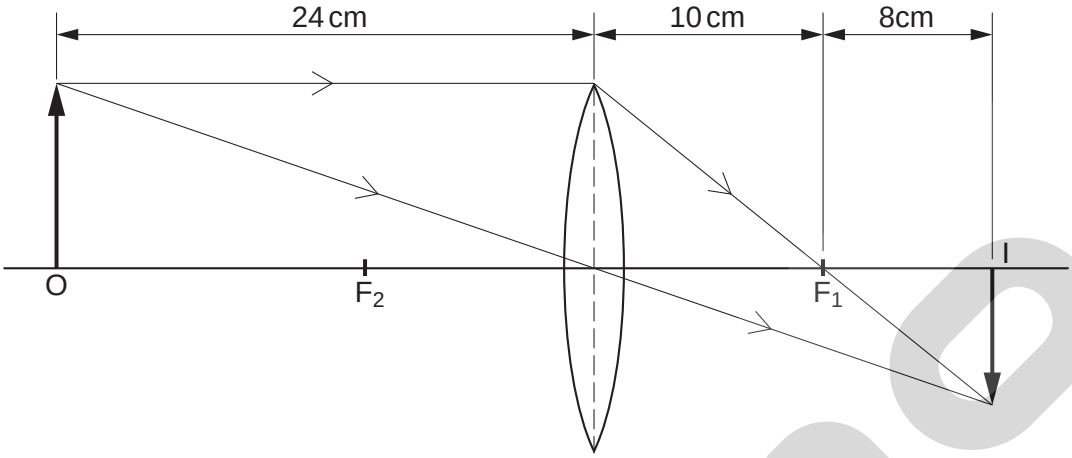

Fig. 8.1

(a) State the value of the focal length of the lens.

focal length = ... cm [1]

(b) The object O is moved a small distance to the left.

State two things that happen to the image I.

1. .....

2. ..... [2]

(c) Points F_1 and F_2 are marked on Fig. 8.1.

(i) State the name we give to these two points.

..... [1]

(ii) On Fig. 8.1, draw the ray from the top of the object which passes through F_2.

Continue your ray until it meets the image. [4]

[Total: 8]

© UCLES 2010
www.root19.com

+91 - 9969 353 391

For Examiner's Use

9 **(a)** A warning on the packaging of a light switch purchased from an electrical store reads

> **SAFETY WARNING**
>
> This push-button switch is not suitable for use in a washroom. Lights in washrooms should be operated by pull-cord switches.

(i) Explain why it might be dangerous to use a push-button switch in a washroom.

.....

.....

..... [2]

(ii) Why is it safe to use a pull-cord switch in a washroom?

.....

..... [1]

(b) An electric heater, sold in the electrical store, has a current of 8 A when it is working normally.

The cable fitted to the heater has a maximum safe current of 12 A.

Which of the following fuses would be most suitable to use in the plug fitted to the cable of the heater? Tick one box.

5 A ☐

10 A ☐

13 A ☐

20 A ☐

[1]

(c) The cable for connecting an electric cooker is much thicker than the cable on a table lamp.

(i) Why do cookers need a much thicker cable?

.....

..... [1]

(ii) What would happen if a thin cable were used for wiring a cooker to the supply?

.....

..... [1]

[Total: 6]

www.root19.com +91 - 9969 3[illegible]

For Examiner's Use

10 A transformer has 500 turns in both its primary and its secondary coils. It is connected to a 240 V mains supply. There are 4 possible connections to the secondary, labelled W, X, Y and Z on Fig. 10.1.

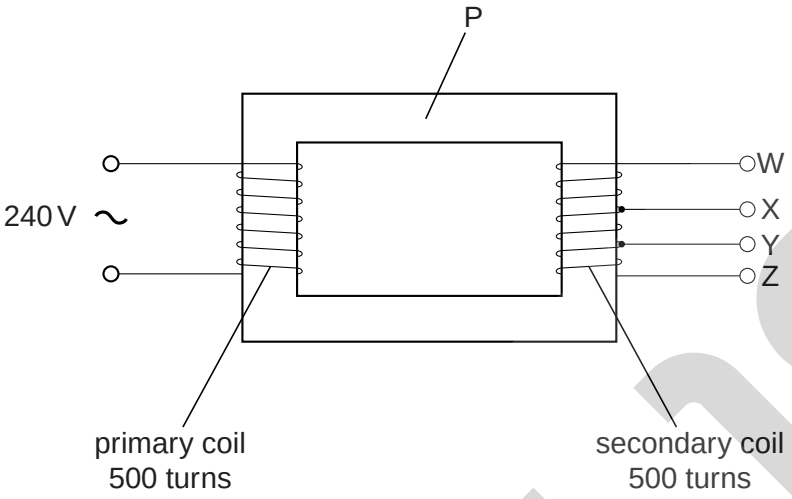

Fig. 10.1

Between W and X there are 300 turns.

Between X and Y there are 175 turns.

Between Y and Z there are 25 turns.

(a) A person wishes to run a 12 V electric bell, using the transformer.

Between which two of the labelled terminals should the bell be connected?

Show your working.

bell connected between terminal ..... and terminal ..... [4]

(b) State the voltage between terminals W and Z.

..... [1]

© UCLES 2010
www.root19.com

+91 - 9969 353 391

For Examiner's Use

(c) State the name given to the part labelled P and the material from which it is made.

name .....

material ..... [2]

(d) Why are the coils normally made from copper wire?

.....

..... [1]

[Total: 8]

© UCLES 2010

www.root19.com +91 - 9969 353 301

For Examiner's Use

11 Fig. 11.1 shows apparatus being used to project a visible spectrum onto a screen, using a lamp with a white-hot filament.

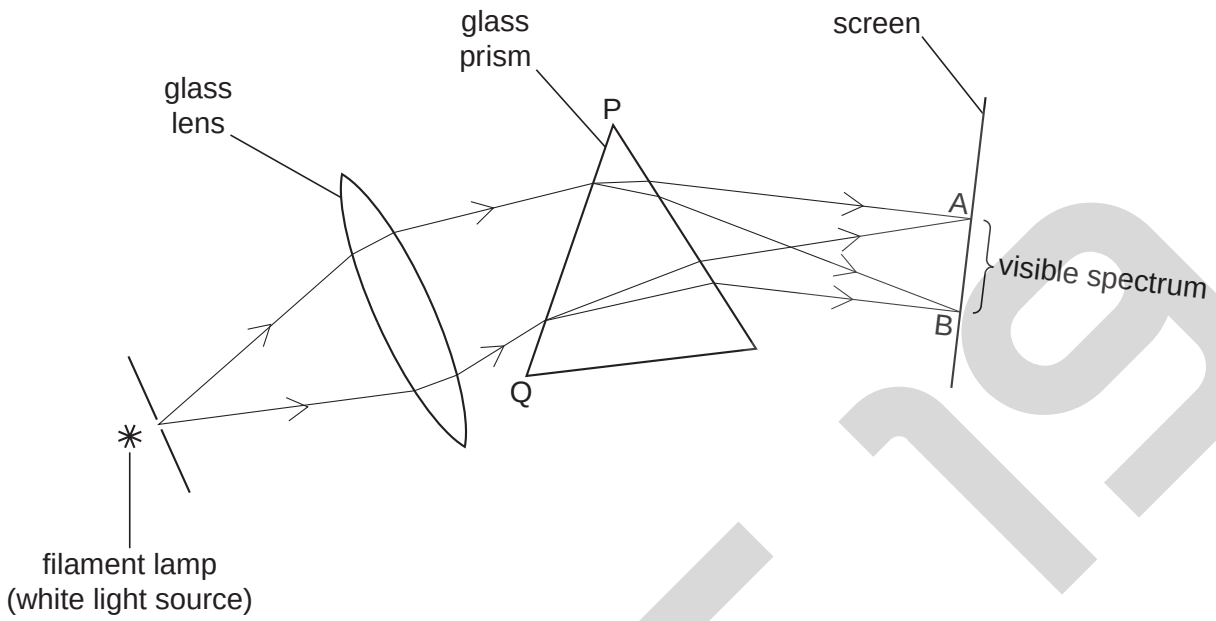

Fig. 11.1

(a) State two things that happen to the white light as it passes through surface PQ of the prism.

1. .....

2. ..... [2]

(b) What colour light will be seen at

(i) edge A of the spectrum, ...

(ii) edge B of the spectrum? .....
[2]

(c) A thermometer with a blackened bulb is moved very slowly across the screen.

(i) On Fig. 11.1, mark using a cross (×) the position where the thermometer will show its largest reading. [2]

(ii) What type of radiation would cause this high reading?

..... [1]

[Total: 7]

© UCLES 2010
www.root19.com

+91 - 9969 353 391

For Examiner's Use

12 **(a)** A scientist, who is also an antiques collector, buys an old watch at an antiques market. The figures on the dial of the watch are painted with a type of luminous paint that is radioactive.

In his laboratory, he puts the watch close to a radiation detector and then places sheets of different materials in the gap between them, as shown in Fig. 12.1.

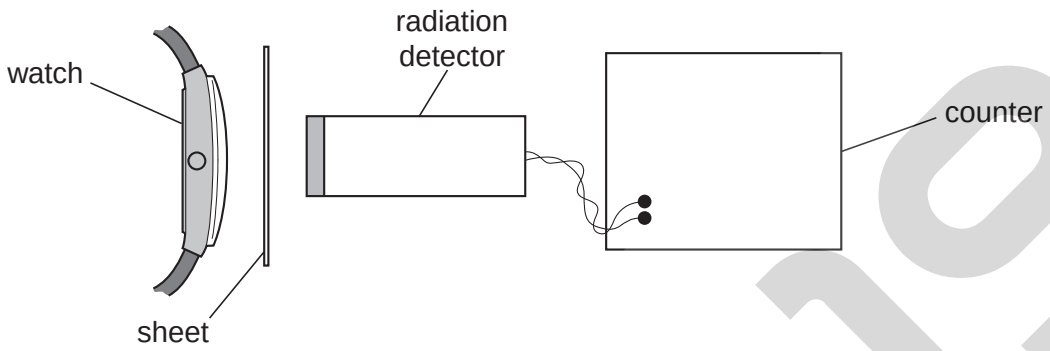

Fig. 12.1

The results of his investigation are given in the following table.

material	effect
sheet of paper	no observable change in count rate
1 mm thick sheet of aluminium	a noticeable decrease in the count rate
1 mm thick sheet of lead	considerable decrease in the count rate but still above background

(i) From this information, deduce the type or types of radiation escaping from the watch.

.....

.....

..... [2]

(ii) The back of the watch is made of steel 1 mm thick.

State one reason why there would be a health hazard when wearing this watch.

.....

.....

..... [1]

www.root19.com +91 - 9969 353 301

For Examiner's Use

(b) Radioactive materials are stored in a cupboard.

(i) Which of the symbols shown in Fig. 12.2 is used on the door of the cupboard to warn of the radiation hazard? Tick one box.

☐

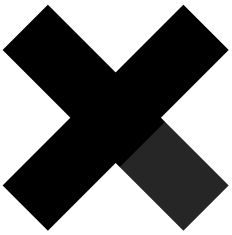

☐

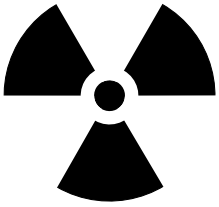

☐

☐

Fig. 12.2

[1]

(ii) State one other safety precaution that should be taken when storing the radioactive substances in the cupboard.

.....

..... [1]

[Total: 5]

© UCLES 2010
www.root19.com

+91 - 9969 353 391

BLANK PAGE

© UCLES 2010
www.root19.com

+91 - 9969 353 391

BLANK PAGE

Permission to reproduce items where third-party owned material protected by copyright is included has been sought and cleared where possible. Every reasonable effort has been made by the publisher (UCLES) to trace copyright holders, but if any items requiring clearance have unwittingly been included, the publisher will be pleased to make amends at the earliest possible opportunity.

University of Cambridge International Examinations is part of the Cambridge Assessment Group. Cambridge Assessment is the brand name of University of Cambridge Local Examinations Syndicate (UCLES), which is itself a department of the University of Cambridge.

www.root19.com +91 - 9969 353 391